PIC28-B-SSOP28 V2 Card (for OpenPIC Pro V2 Motherboard) Schematic

Hardware Revision v2

If you are experiencing some problems with any of our products or just need additional information,please contact our technical support: microhello_sales@163.com

If you want to learn more about our product,please visit our website:

www.MicroHello.com

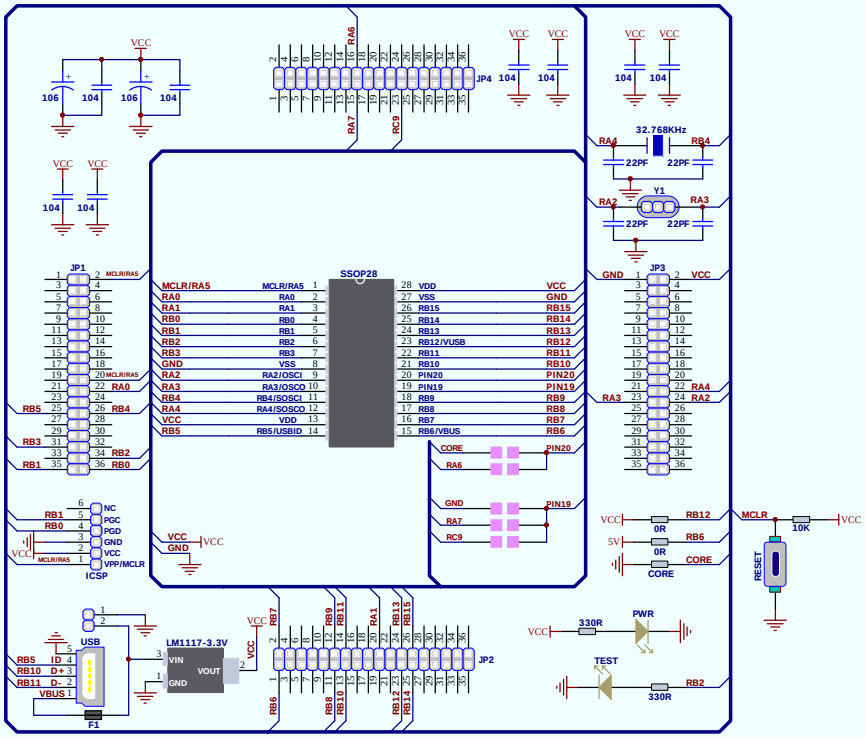

Title			
Size A3	Number		Revision
Date: 21-Jun-2025		Sheet of	
File: F:\protel电路设计\LogiFind_Design2022\Drawing		Drawn By:	