PIC100-MZ V2 Card (for OpenPIC Pro V2 Motherboard) Schematic

Hardware Revision v2

If you are experiencing some problems with any of our products or just need additional information,please contact our technical support: microhello_sales@163.com
If you want to learn more about our product,please visit our website:

www.MicroHello.com

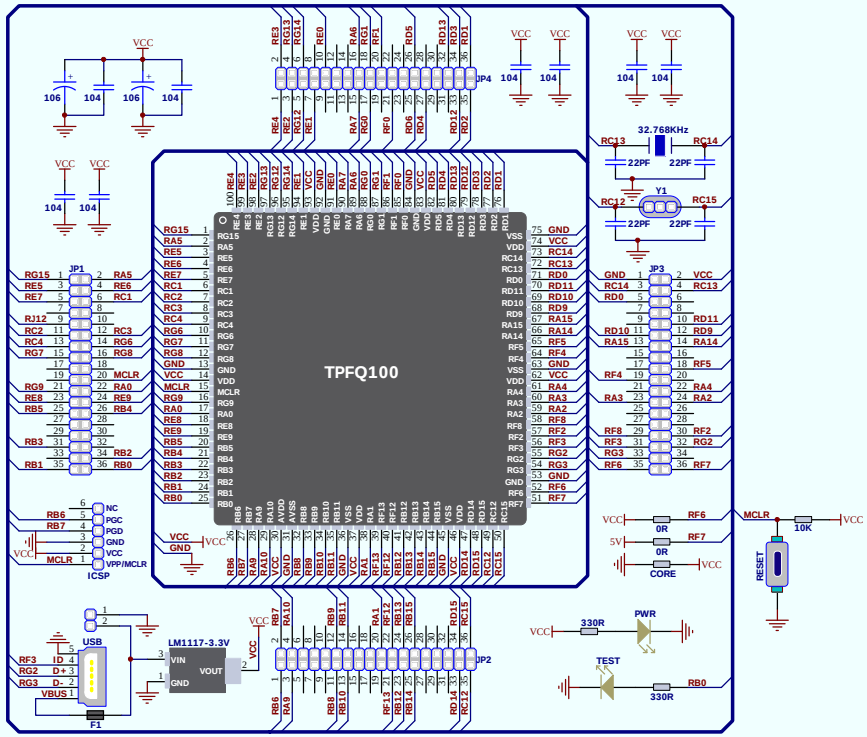

Title			
Size A3	Number		Revision
Date: 21-Jun-2025		Sheet of	
File: F:\protel电路设计\LogiFind_Design2022.DDB		Drawn By:	