PIC100-C V2 Card Schematic

Hardware Revision v2

If you are experiencing some problems with any of our products or just need additional information,please contact our technical support: microhello_sales@163.com

If you want to learn more about our product,please visit our website:

www.MicroHello.com

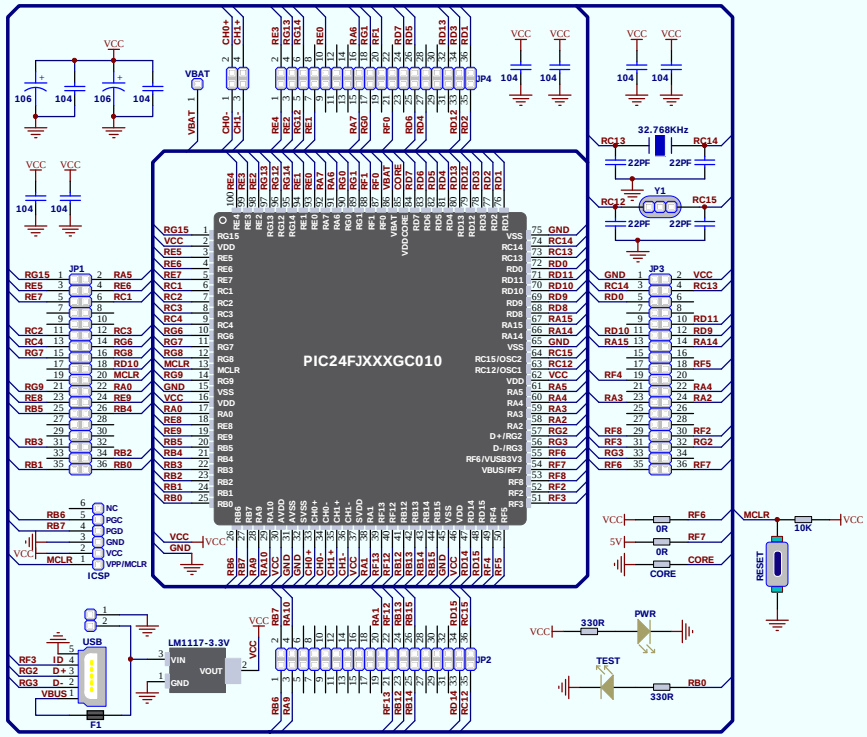

Title		
Size A3	Number	Revision
Date: 21-Jun-2025	Sheet of	
File: F:\protel电路设计\LogiFind_Design2022\Drawing	Drawn By:	